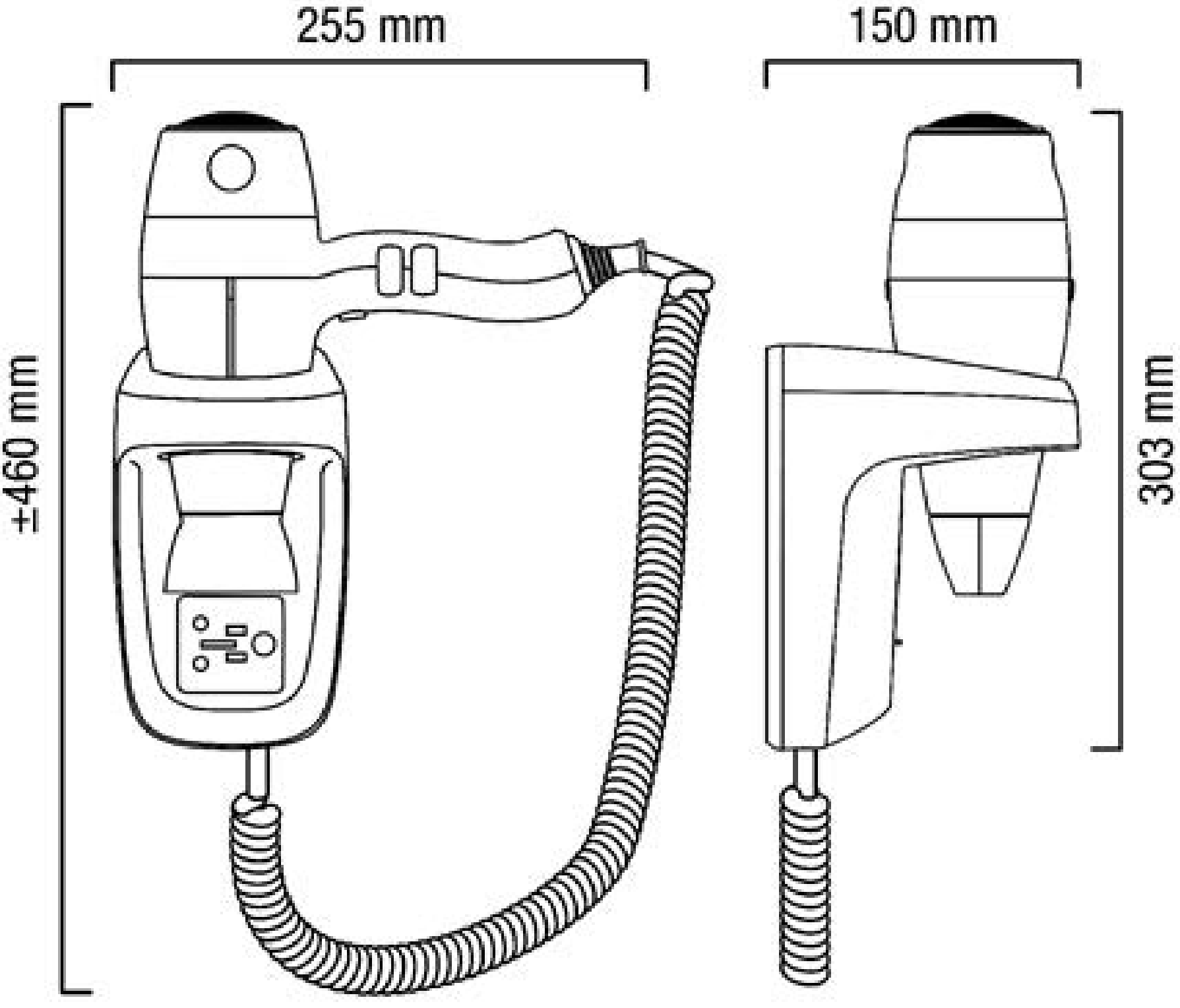
255 mm
150 mm
±460 mm
303 mm